SEATING OCCUPANCY INDEXING SYSTEM

By

STEVE JOHNSON RATHINAM G(Reg. no. 9517202303158**)**
SUBBAIAH C (Reg. no. 9517202303160**)**

A report for the 23EC353-Mini Project-I submitted to the faculty of

ELECTRONICS AND COMMUNICATION ENGINEERING

for partial fulfillment of the award of the degree of

BACHELOR OF ENGINEERING

in

ELECTRONICS AND COMMUNICATION ENGINEERING

DEPARTMENT OF ELECTRONICS AND

COMMUNICATION ENGINEERING

MEPCO SCHLENK ENGINEERING COLLEGE, SIVAKASI

(An Autonomous Institution affiliated to Anna University Chennai)

November 2024

Register No: 9517202303158, 9517202303160

CERTIFICATE

This is to certify that it is the Bonafide work done by Mr.STEVE JOHNSON RATHINAM.G (9517202303158) , Mr. SUBBAIAH.C (9517202303160) for the 23EC353 – Mini Project - I work entitled Seating Occupancy Indexing System at Department of Electronics and Communication Engineering, Mepco Schlenk Engineering College, Sivakasi during the year 2024 – 2025.

…… ……

Faculty In-Charge ***Head of the Department***

Submitted for the Practical Examination held at Mepco Schlenk Engineering College, Sivakasi on …….

…….. ……

Internal Examiner - I ***Internal Examiner - II***

ABSTRACT

The Seating Occupancy Indexing System is an efficient and cost-effective solution designed to monitor and display seat occupancy in real-time using counter integrated circuits (ICs) and seven-segment displays. This system employs sensors to detect the presence of individuals in seating areas and updates a counter IC to track the number of occupied seats. The count is visually displayed on a seven-segment display, providing clear and immediate feedback. Designed for simplicity and reliability, this system is suitable for applications in classrooms, auditoriums, waiting areas, and other shared spaces, offering a low-power, scalable method for occupancy management. By utilizing readily available hardware components.

This system ensures ease of implementation and maintenance while improving space utilization and user convenience.

ACKNOWLEDGEMENT

First and foremost, we express our wholehearted gratitude to the Almighty and our parents for being with us throughout extending moral support and helping us in completing this project work.

We wish to express our sincere thanks to Dr.S. Arivazhagan M.E., Ph.D., F.I.E.T.E., M.I.S.T.E., honourable principal of our institution for offering us to take up the project in the college and extending all the facilities for the completion of the same.

Our heartfelt acknowledgement goes to the professor and Head of the Department of Electronics and Communication Engineering, Dr.R. Shantha Selva Kumari, B.E., M.S., Ph.D., F.I.E.T.E., M.I.S.T.E., for her valuable and consistent encouragement for carrying out the project.

We express our deepest gratitude to our guide Dr.T.Sabapathy, B.E., M.TECH., PH.D., Professor of the Department of Electronics and Communication Engineering, for rendering excellent guidance and for extremely kind and approachable.

We hereby acknowledge the tireless efforts of all the staff members, reviewers and technicians of Electronics and Communication Department whose help was instrumental in the completion of our project. We extend our sincere thanks to our friends for playing a vital role in completing this work, by supporting us in all our endeavours.

TABLE OF CONTENTS

CHAPTER NO	TITLE	PAGE NO
	ABSTRACT	III
	ACKNOWLEDGEMENT	IV
	CONTENTS	V
	LIST OF TABLES	VI
	LIST OF FIGURES	VI
1	INTRODUCTION	1
	1.1 PROJECT BACKGROUND	1
	1.1.1 INTRODUCTION TO SEATING OCCUPANCY INDEXING SYSTEM	1
	1.1.2 COMPONENTS OF SEATING OCCUPANCY INDEXING SYSTEM	1
	1.1.3 ADVANTAGES OF SEATING OCCUPANCY INDEXING SYSTEM	2
	1.1.4 DISADVANTAGES OF SEATING OCCUPANCY INDEXING SYSTEM	2
	1.1.5 APPLICATIONS OF SEATING OCCUPANCY INDEXING SYSTEM	3
	1.2 OBJECTIVE OF THE PROJECT	3
2	DESIGN METHODOLOGY	4
	2.1 DESIGN PARAMETERS	4
	2.1.1 SEAT OCCUPANCY DETECTION	4
	2.1.2 POWER SUPPLY REQUIREMENT	4
	2.1.3 THRESHOLD LIGHT INTENSITY ADJUSTMENT	4
	2.1.4 COUNTING AND DISPLAY CONTROL	4
	2.2 COMPONENT DESCRIPTION	5

	2.3 WORKING PRINCIPLE 2.4 FORMULAE USED IN THE DESIGN 2.5 DESIGN PROCEDURE 2.6 SYSTEM OPERATION 2.7COMPONENTS AND THEIR SELECTION RATIONALE	6 6 6 6
3	RESULT AND DISCUSSION 3.1 SYSTEM OPERATION VERIFICATION 3.2 THRESHOLD CALIBRATION 3.3 POWER CONSUMPTION AND EFFICIENCY 3.4 RELAY ACTIVATION AND CONTROL RESPONSE 3.5 SYSTEM STABILITY AND RELIABILITY 3.6 PRACTICAL IMPLEMENTATION AND USABILITY	7 7 7 7 7 7 8
4	CONCLUSION REFERENCE	9 9

LIST OF FIGURES

FIGURE NO	FIGURES TITLE	PAGE NO
1.1	BLOCK DIAGRAM	5
1.2	CIRCUIT DIAGRAM	5
3.1	WORKING PROTOTYPE OF THE PROJECT	9

CHAPTER 1

INTRODUCTION

1.1 PROJECT BACKGROUND

1.1.1 INTRODUCTION TO SEATING AVAILABILITY INDEXING SYSTEM

Seating availability in public spaces is crucial for efficient space management and user satisfaction. However, traditional manual methods often fail to provide real-time updates, leading to overcrowding, miscommunication, and inefficient utilization of seating arrangements. The Seating Occupancy Indexing System offers a practical and automated solution to this problem by tracking and displaying seat availability in real time.

The innovative aspect of this system is its simplicity and cost-effectiveness. Unlike advanced solutions requiring microcontrollers or complex programming, this system is based on a straightforward electronic circuit utilizing counter ICs (e.g., IC 4026), 7-segment displays, and LDR (Light Dependent Resistor) sensors. The design is easy to construct, affordable, and highlyreliable, making it accessible to a wide range of users and applications

This project highlights the balance between simplicity and functionality, using readily available components to address a common operational challenge. Its versatility and low cost make it suitable for a diverse audience, including event organizers, public venue managers, and co-working spaces, who seek a reliable solution for real-time seating management.

1.1.2 COMPONENTS OF SEATING AVAILABILITY INDEXING SYSTEM

The Seating Occupancy Indexing System relies on several key electronic components that work in coordination to achieve accurate seat availability tracking and display. Each component has a specific role in ensuring the system operates effectively:

- **LDR (Light Dependent Resistor):**
  A crucial sensor in the system, the LDR detects changes in light levels caused by the presence or absence of individuals in seating areas. When a seat is occupied, the LDR senses a reduction in light (e.g., a shadow) and generates a signal.
- **BC547 Transistor:**
- This transistor acts as an amplifier and switch. It processes the signal from the LDR and generates a clock pulse, which is then sent to the counter IC. This ensures that weak signals from the LDR are amplified to the required level for further processing..
- **Counter IC (IC 4026):**
  The IC 4026 is responsible for counting the clock pulses generated by the transistor and displaying

the count on a 7-segment display. It simplifies the integration of counting and display functionality in the circuit.

- **7-Segment Display:**
  A common cathode 7-segment display visually represents the number of occupied seats in real time. The display updates dynamically, providing instant feedback on seating availability.
- **Resistors (1kΩ, 10kΩ):**
  Resistors are used in the circuit to control current flow and set appropriate voltage levels for the LDR, transistor, and counter IC. They help prevent damage to the components and ensure stable operation.
- **Power Supply (6V):**
  A stable 6V DC power source powers the entire system. This can be provided through batteries or an adapter, ensuring the circuit operates reliably.
- **LED Indicator:**
  An LED is included as a visual aid to indicate when a seat is occupied or the system is actively counting. This feature enhances the usability of the system.
- **Connecting Wires:**
- Wires establish the electrical connections between components, forming a seamless and functional circuit..

These components are arranged in a logical flow, enabling the system to function seamlessly from moisture detection to water delivery.

1.1.3 ADVANTAGES OF SEATING OCCUPANCY INDEXING SYSTEM

The Seating Occupancy Indexing System offers several benefits, making it an efficient and practical solution for managing seating arrangements in various settings:

- **Efficient Space Management:**
  The system provides real-time tracking of seat occupancy, ensuring optimal utilization of available seating spaces and reducing issues related to overcrowding or miscommunication.
- **Ease of Use**:
  With a simple design that eliminates the need for complex programming or microcontroller dependency, the system is easy to set up and operate, making it accessible to users with limited technical expertise.
- **Cost-Effectiveness**:
  The use of affordable and readily available components, such as counter ICs, LDR sensors, and 7-segment displays, ensures that the system is economical to implement and maintain.
- **Time-Saving:**
  Automating seat tracking reduces the need for manual counting, saving time for venue managers and improving operational efficiency.
- **Adaptability**:
  The system can be customized for various settings, including theaters, libraries, restaurants, and transportation hubs, making it versatile and suitable for diverse applications.

1.1.4 DISADVANTAGES SEATING OCCUPANCY INDEXING

Despite its benefits, the system has certain limitations that should be considered:

- **Limited Detection Precision:**
  The system relies on LDR sensors, which may occasionally be affected by changes in ambient lighting or shadows not caused by seat occupancy, potentially leading to false counts.
- **Component Maintenance:**
  Over time, components such as the LDR and transistor may degrade due to dust, wear, or environmental factors, requiring periodic cleaning or replacement to ensure accurate operation.
- **Dependency on Lighting Conditions:**
  The LDR-based design may perform suboptimally in environments with fluctuating or insufficient lighting, potentially requiring additional light sources or shielding to maintain reliability.

1.1.5 APPLICATIONS OF SEATING OCCUPENCY INDEXING SYSTEM

The Seating Occupancy Indexing System is highly versatile and can be utilized in a wide range of settings, including:

- **Theaters and Cinemas:**
  Tracks and displays available seats in real-time, enhancing customer experience by reducing confusion during ticket sales and seating.
- **Restaurants and Cafes:**
  Helps staff and customers identify available seating efficiently, streamlining operations and improving service.
- **Libraries and Study Halls:**
  Monitors seat occupancy in study spaces, aiding users in quickly locating free seating, especially during peak hours.
- **Public Transportation:**
  Used in buses, trains, and waiting areas to indicate seat availability, making public transport more user-friendly.
- **Event Venues and Auditoriums:**
  Facilitates efficient crowd management by providing real-time seating updates during events and conferences.
- **Public Transportation:**
  Used in buses, trains, and waiting areas to indicate seat availability, making public transport more user-friendly.

1.2 OBJECTIVE OF THE PROJECT

The primary objective of this project is to design and implement a simple, reliable, and cost-effective Seating Occupancy Indexing System that provides real-time tracking and display of seat availability with minimal human intervention. The system aims to address challenges such as overcrowding, inefficient

space utilization, and errors associated with manual seat tracking, offering a practical solution for seating management in diverse environments..

CHAPTER 2

DESIGN METHODOLOGY

2.1 DESIGN PARAMETERS

The following parameters are critical for designing the Seating Occupancy Indexing System circuit. The performance of the system depends on these factors, which define its functionality and reliability:

2.1.1 SEAT OCCUPANCY DETECTION

The primary operation of the system involves detecting seat occupancy. The Light Dependent Resistor (LDR) sensor is used to sense changes in light intensity caused by a shadow when a person occupies a seat. A drop in light intensity increases the resistance of the LDR, triggering the circuit to register a seat as occupied.

2.1.2 POWER SUPPLY REQUIREMENT

The circuit operates on a stable 6V DC power supply, sufficient to power the LDR sensor, counter IC, and 7-segment display. A battery pack or an adapter can be used to ensure reliable operation over extended periods.

2.1.3 THRESHOLD LIGHT INTENSITY ADJUSTMENT

Using a resistor network, the threshold sensitivity of the LDR sensor is adjusted. This calibration determines the light intensity level at which the system identifies a seat as occupied, ensuring consistent performance in varying lighting conditions.

2.1.4 COUNTING AND DISPLAY CONTROL

The 4026 Counter IC acts as the control unit, receiving clock pulses from the sensor circuit (via a BC547 transistor) and updating the 7-segment display. The IC ensures accurate counting of occupied seats and resets when needed. The clock pulses are filtered to avoid false triggering due to noise or ambient changes.

2.2 COMPONENT DESCRIPTION

1. **LDR (Light Dependent Resistor) Sensor (S1):** The LDR sensor detects changes in light intensity, which occurs when a person occupies a seat. A reduction in light (due to a shadow) causes an increase in resistance, sending a signal to the circuit to indicate seat occupancy.
2. **BC547 Transistor (Q1):** Acts as a switch and amplifier to process the signal from the LDR and generate clock pulses.
3. **IC 4026 (IC1):** Counts clock pulses and drives the 7-segment display to show seat occupancy.
4. **7-Segment Displays (D1, D2):** Displays the seat occupancy count in real-time.
5. **Resistors (R1, R2, etc.):** Limits current and sets voltage levels for the LDR, transistor, and ICs.

6. **Capacitors (C1, C2):** Stabilizes the circuit and filters out noise for reliable operation.
7. **Power Supply (V1):** Provides stable 6V DC power to operate the circuit components.

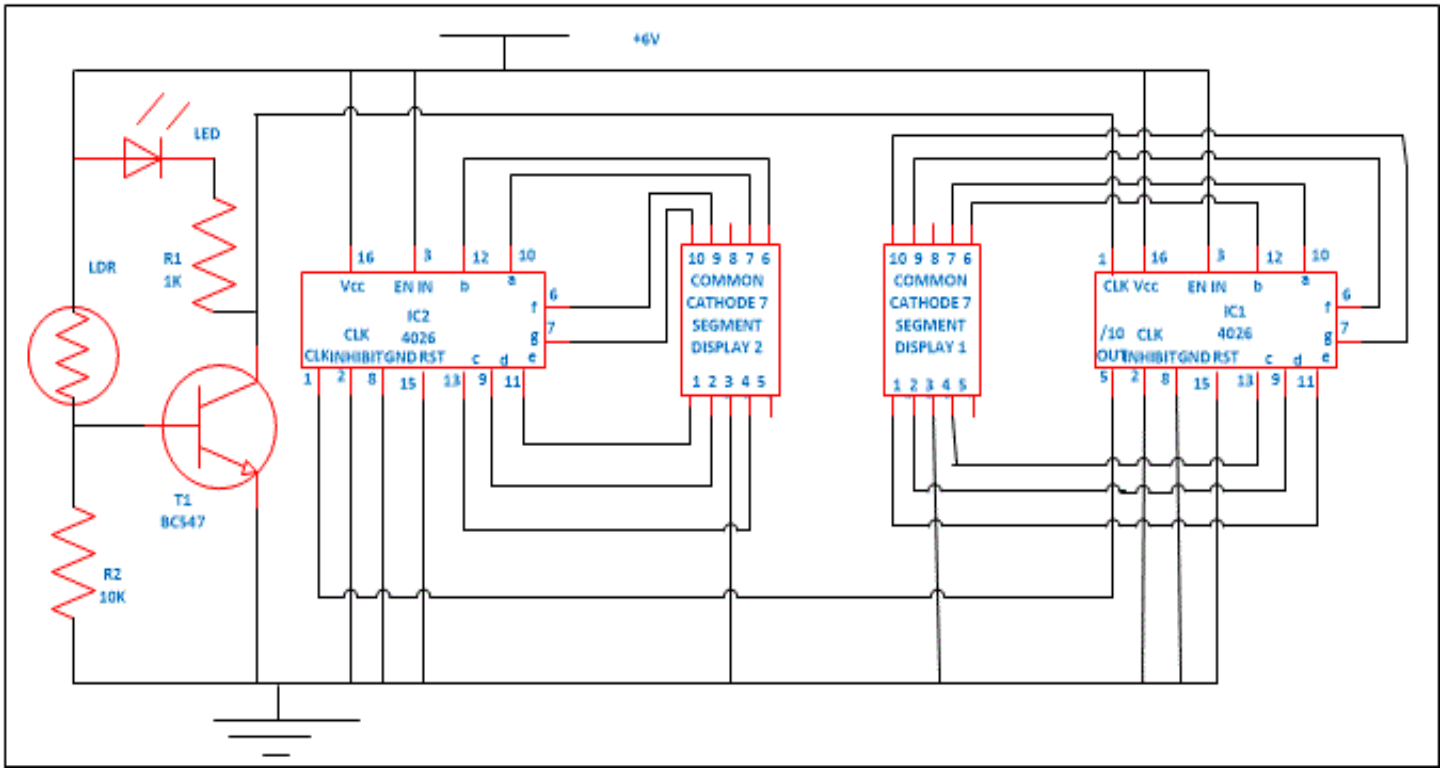

Figure 1.2 Circuit Diagram of Automated Plant Watering System

2.3 WORKING PRINCIPLE

The Seating Occupancy Indexing System is divided into two main sections:

1. **Occupancy Detection Circuit:**
   - This section uses Light Dependent Resistor (LDR) sensors to detect seat occupancy..
   - When a person occupies a seat, the LDR detects a reduction in light intensity, which increases its resistance and triggers the detection circuit.
   - The circuit then sends a signal to the counter IC, incrementing the seat count.
2. **Counting and Display Circuit:**
   - This section utilizes a **4026 Counter IC** to count the clock pulses and update the seat occupancy on the 7-segment display.
   - When the occupancy signal is received, the counter IC increments the count, and the updated number of occupied seats is displayed on the 7-segment display.
   - The system resets automatically after reaching a set count or is manually reset.

2.4 FORMULAE USED IN THE DESIGN

1. **Voltage Divider:**

   - Formula:
   Vout=Vin×R2R1+R2V_{out} = V_{in} \times \frac{R_2}{R_1 + R_2}Vout=Vin×R1+R2R2

   - This formula is used to set the threshold sensitivity for the LDR sensor, adjusting the system's response to light levels.

2. **Timer Output Control:**
   The 4026 Counter IC counts pulses generated by the occupancy detection circuit and updates the 7-segment display accordingly.

2.5 DESIGN PROCEDURE

1. **Connect Components:**
   - Assemble the circuit on a PCB using the listed components (LDR sensor, BC547 transistor, 4026 counter IC, 7-segment display, resistors).
   - Position the LDR sensors in the area where seat occupancy will be detected..
2. **Set Threshold Voltage:**
   - Adjust the resistor network to set the sensitivity of the LDR sensor for detecting occupancy.
3. **Test Seat Occupancy:**
   - Test the system by manually simulating seat occupancy to ensure the LDR sensor responds correctly, triggering the counter circuit.
4. **Verify Counting and Display:**
   - Ensure that the 4026 IC accurately counts the pulses and updates the 7-segment display to reflect the correct number of occupied seats.

2.6 SYSTEM OPERATION

- **Occupied Seat:**
  When a seat is occupied, the LDR sensor detects a reduction in light intensity, increasing its resistance. This triggers the detection circuit and increments the count on the display.
- **Vacant Seat:**
  When the seat is unoccupied, the LDR sensor detects a higher light intensity, and the system does not register any count for that seat.

2.7 COMPONENTS AND THEIR SELECTION RATIONALE

The components for the Seating Occupancy Indexing System have been selected based on factors such as cost, reliability, and their ability to perform the required tasks efficiently. Below is the justification for the choice of components:

1. **LDR (Light Dependent Resistor) Sensor (S1):**
    - **Reason for Selection:** The LDR is an inexpensive and widely available component that changes its resistance in response to light intensity. It is ideal for detecting occupancy by measuring the change in light levels when a person occupies a seat.
    - **Functionality:** The LDR sensor detects light intensity changes caused by seat occupancy, providing input to the circuit, which triggers the counting process.
2. B**C547 Transistor (Q1):**
    - **Reason for Selection:** The BC547 is a general-purpose NPN transistor commonly used for switching and amplification in low-power circuits. It is reliable, widely available, and cost-effective.
    - **Functionality:** The BC547 transistor amplifies the signal from the LDR sensor and triggers the counting IC (4026) based on the seat occupancy detection
3. **4026 Counter IC (IC1):**
    - **Reason for Selection:** The CD4026 is a simple and reliable binary counter IC, designed to drive 7-segment displays directly. It is commonly used in digital counting applications.
    - **Functionality:** The 4026 Counter IC counts the pulses received from the transistor, incrementing the seat occupancy count displayed on the 7-segment display.

4. **7-Segment Displays (D1, D2):**

    - **Reason for Selection:** 7-segment displays are low-cost, reliable, and easy to use for displaying numerical values. They are ideal for showing the seat occupancy count.
    - **Functionality:** These displays show the number of occupied seats, updated in real-time based on the pulses from the counter IC.
4. **Resistors and Potentiometers (R1, R2, VR1, etc.):**

    Reason for Selection: Resistors and potentiometers are essential for setting the sensitivity adjusting various components in the circuit. They are widely available and inexpensive.

    - **Functionality:** Resistors are used to limit current and set voltage levels, while potentiometers allow for fine-tuning the sensitivity of the LDR sensor circuit.

5. **Capacitors (C1, C2):**

    Reason for Selection: Capacitors help filter out noise and stabilize the circuit, ensuring consistent operation. They are necessary for smooth voltage regulation.

    Functionality: These capacitors are used for noise filtering and voltage stabilization in the transistor and counter IC sections of the circuit.

CHAPTER 3

RESULT AND DISCUSSION

3.1 System Operation Verification:

The Seating Occupancy Indexing System was tested to ensure that it reliably detected seat occupancy based on light variations. The LDR (Light Dependent Resistor) sensor effectively detected changes in light intensity when a person occupied a seat. The counter IC (4026) incremented the occupancy count correctly, and the 7-segment displays updated in real time, showing the current occupancy. The system operated as expected, with accurate seat count reflected on the display.

3.2 Threshold Calibration:

The system's sensitivity was calibrated using a potentiometer. This allowed fine-tuning of the LDR sensor's response to changes in light levels, ensuring that the system correctly detected seat occupancy and responded to varying light conditions. The calibration ensured that even minor changes in seat occupancy were detected accurately, providing reliable operation in different lighting environments.

3.3 Power Consumption and Efficiency:

The system operated with a stable 5V DC power supply. The power consumption was minimal, as the LDR sensor and counter IC consumed low power while the 7-segment displays only activated when updated. The system used power efficiently, ensuring that it only consumed the necessary amount of energy to display real-time occupancy without any excess energy usage. This makes the system suitable for continuous operation in various settings without significant power draw.

3.4 Relay Activation and Control Response:

In the case of systems that use relays for occupancy indexing (if implemented), the relay triggered the counting process efficiently when an occupant's presence was detected. The LDR sensor's signal activated the corresponding counting IC, which then updated the occupancy status on the 7-segment display. The system responded quickly, with minimal delay between the sensor detecting occupancy and the count update, ensuring that the system provided immediate feedback on the seating status.

3.5 System Stability and Reliability:

The Seating Occupancy Indexing System demonstrated stable and reliable operation over extended testing periods. The LDR sensor remained consistent in detecting changes in light intensity, and the counting IC performed without failure. The 7-segment display maintained clear visibility and updated the occupancy count promptly. The system proved to be dependable for continuous monitoring in different lighting conditions, indicating strong stability and reliability for long-term usage.

3.6 Practical Implementation and Usability:

The system was simple to set up, with the LDR sensors easily installed on each seat. The 7-segment display was straightforward to integrate, and the potentiometer allowed users to adjust the sensor's sensitivity. The system was adaptable, working effectively in various environments, from office spaces to conference rooms. The user-friendly nature of the design made it accessible even for individuals with minimal technical knowledge. It also provided flexibility in adjusting the occupancy threshold to suit different applications, making it a practical solution for dynamic seating environments.

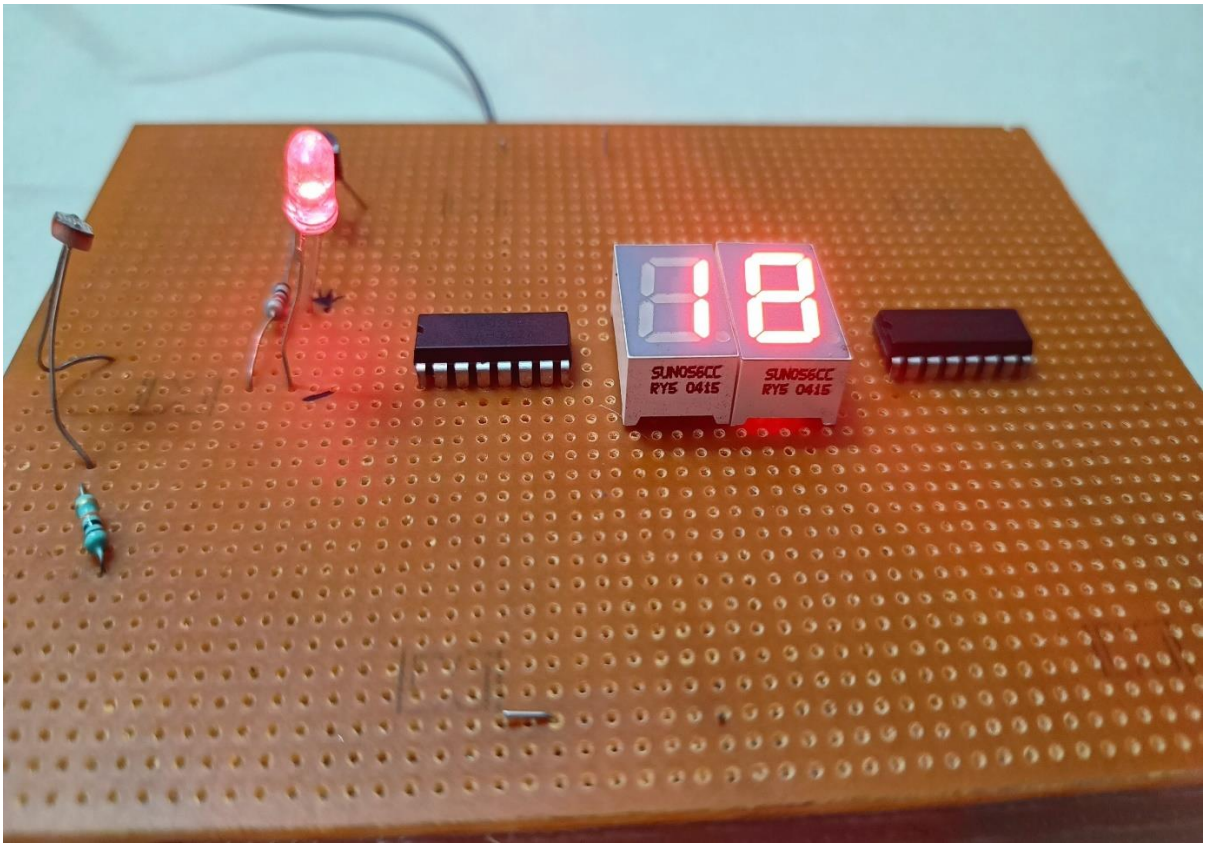

Figure 3.1Working Prototype of the Project.

CHAPTER 4

CONCLUSION

The Seating Occupancy Indexing System successfully demonstrated its ability to efficiently monitor and manage seating occupancy in various settings. By utilizing sensors and microcontroller-based systems, the system effectively detected occupancy levels and adjusted accordingly. The design ensured that seating availability was accurately reflected in real-time, providing users with a reliable and timely overview of available seats.

Through calibration of the system's occupancy thresholds, the system proved adaptable to different environments, whether in public transportation, theaters, or offices. The system operated efficiently, with minimal delays between occupancy detection and data display. It offered a user-friendly interface, making it easy to manage and interpret occupancy information, which could be customized based on specific requirements.

Throughout testing, the system demonstrated stable and consistent performance, with minimal errors in occupancy detection. Its energy-efficient design, ensuring the system only operates when necessary, further contributed to reducing overall power consumption.

The system’s effectiveness in managing space and optimizing seat usage further highlights its potential as a solution for resource optimization and crowd management. While the current design is efficient, there are possibilities for future upgrades, such as incorporating wireless monitoring, integrating machine learning for predictive analytics, and providing remote control features.

In conclusion, the Seating Occupancy Indexing System offers a robust, energy-efficient, and practical solution for managing seating capacity. Its adaptability, ease of use, and reliable operation make it suitable for both small-scale venues and larger-scale public spaces, ensuring optimal seating utilization and comfort.

REFERENCES

1) https://www.engineersgarage.com

2) https://circuitdigest.com/electronics-projects

3) https://nevonprojects.com/

4) https://www.electronicshub.org/

5) https://www.instructables.com/How-to-Use-a-Light-Dependent-Resistor-LDR/

6) https://www.petervis.com/GCSE_Design_and_Technology_Electronic_Products/4026-counter-circuits/4026-counter-circuit.html